Standard Fuel Only - 5V Hall EMU
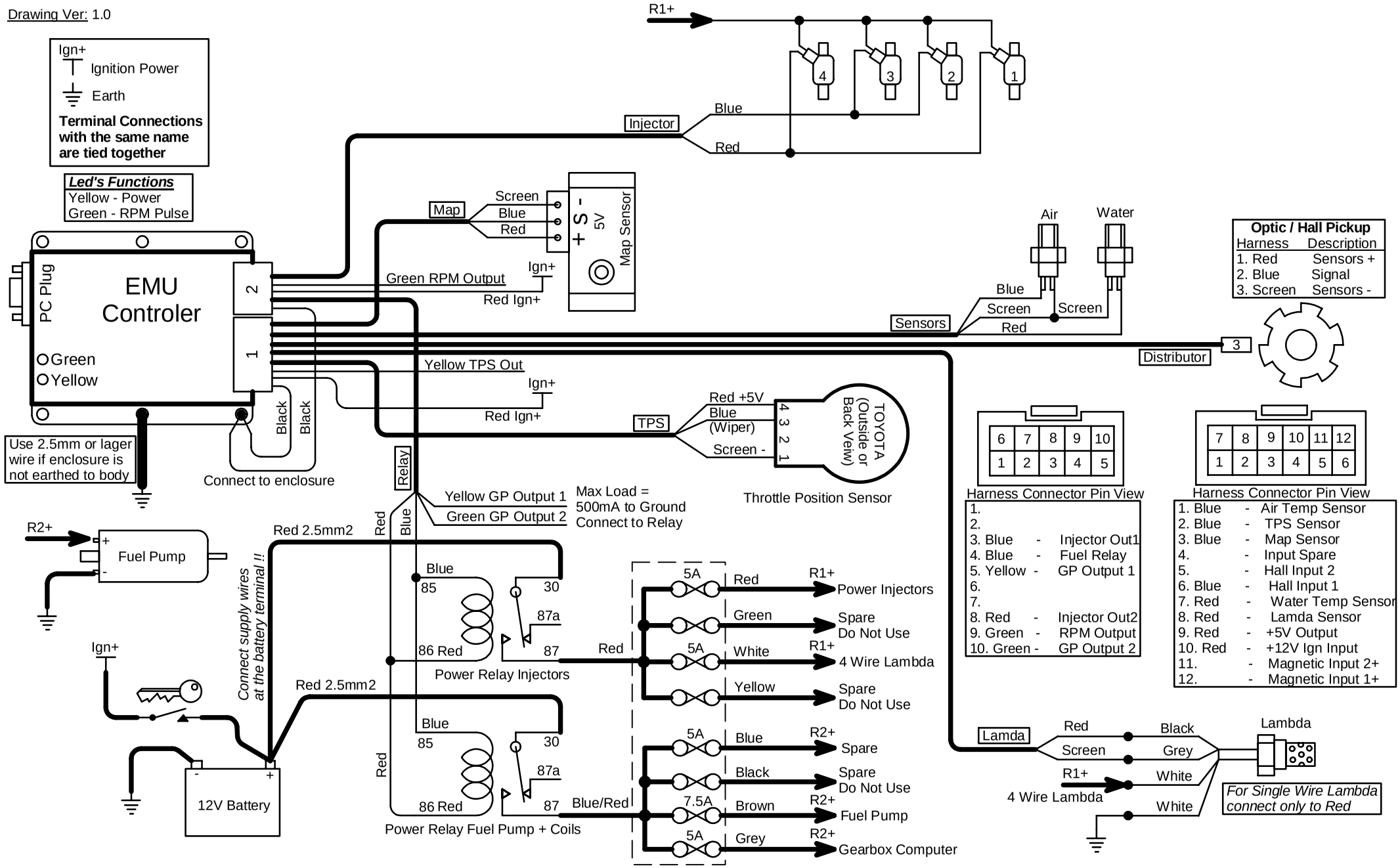
Harness Required: E03 Ver 1.0 & E18 Ver 1.0
Last Changed: 26/08/2008
Drawing Ver: 1.0